Date _____ Specifier _____ Project _____ Type _____

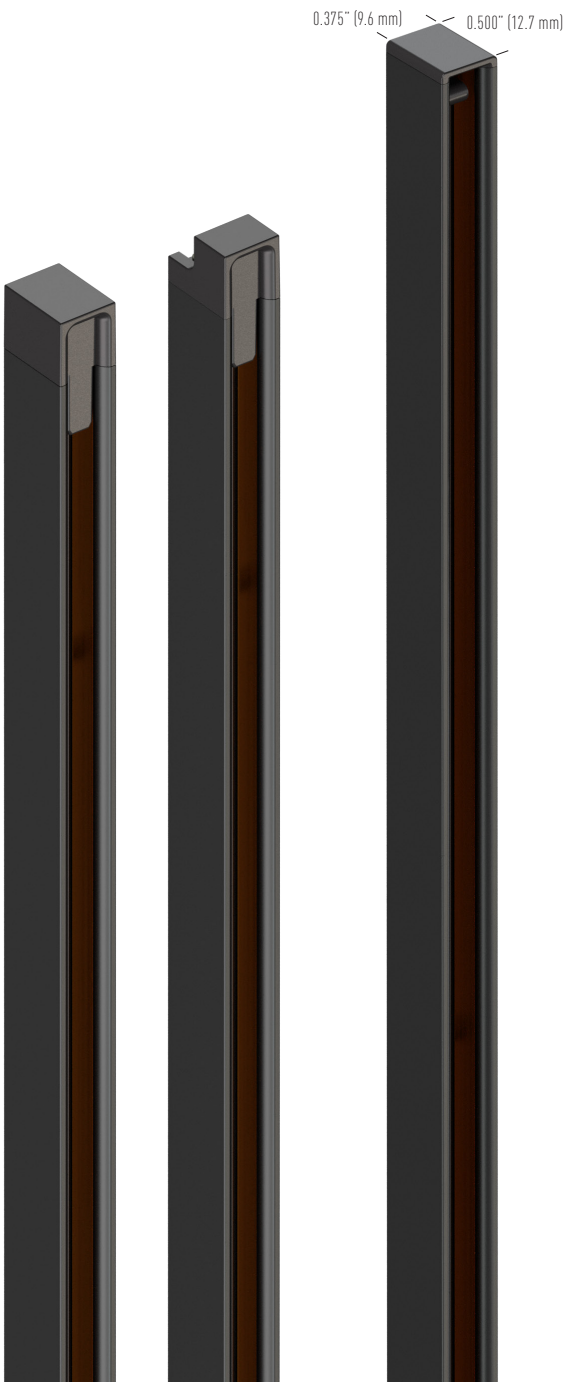

LIFELINE SURFACE

A magnetic track system so invisible that light becomes an architectural detail

Embeds seamlessly in ceilings and walls to conduct electricity virtually anywhere

Infinitely customizable with mini magnetic modules compatible with the LIFELINE system

Application

Track system

Supports MILI, PIXIS LIFELINE, PIXIS FIVE LIFELINE

Physical

General dimensions

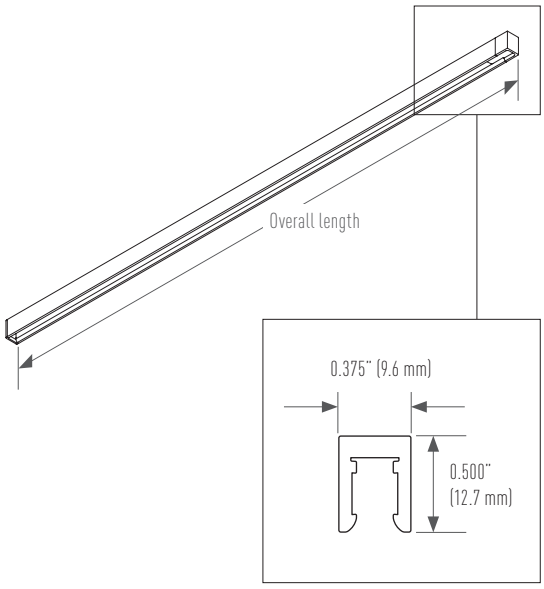

Finish

ABK Anodized black

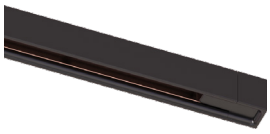

ACL Anodized clear
(internal cap always **ABK**)

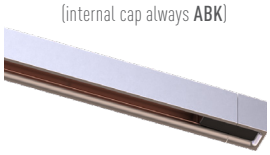

MW Matte white
(internal cap always **ABK**)

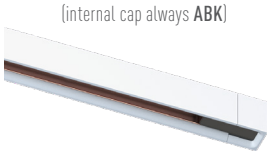

Length specifications

2.7" to 100.0" in increments of 0.1".
May be customizable over 100".

⚠ Inside fit is always smaller (see Length calculation section).

Ingress protection

IP20

Construction

Aluminum body

Weight

0.11 lbs/ft (160 g/m)

Storage temperature

0 °C to 40 °C, <50% RH.

Operating ambient temperature

0 °C to 40 °C

MADE IN CANADA / FABRIQUÉ AU CANADA · RoHS COMPLIANT · c UL us · CE · FC

CAN ICES-005 (B) CAN NMB-005 (B)

System overview

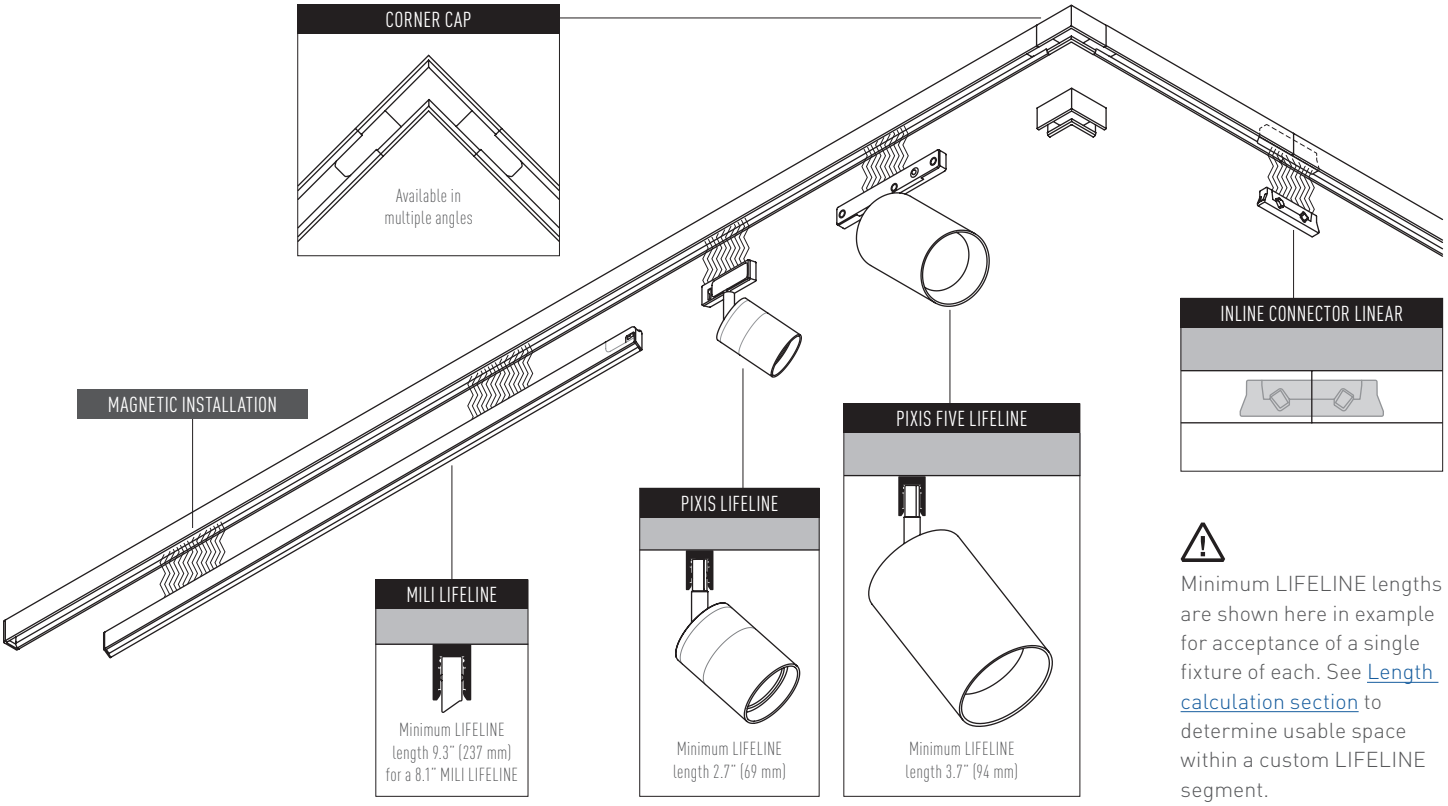

⚠ Minimum LIFELINE lengths are shown here in example for acceptance of a single fixture of each. See Length calculation section to determine usable space within a custom LIFELINE segment.

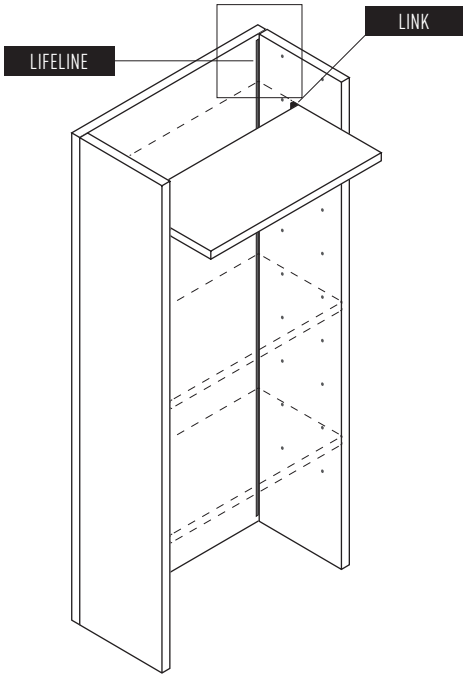

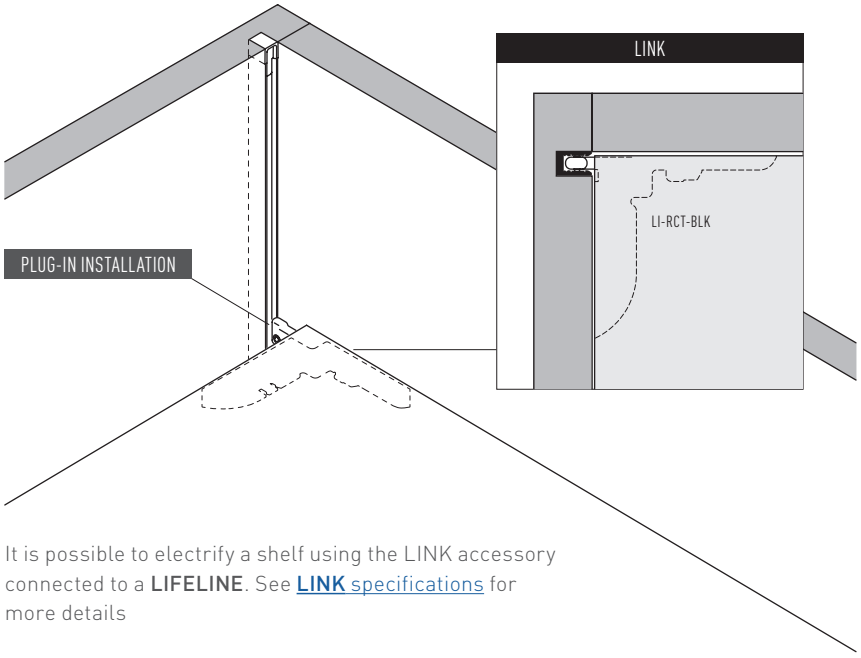

It is possible to electrify a shelf using the LINK accessory connected to a **LIFELINE**. See **LINK** specifications for more details

Electrical

Input Voltage 24 VDC in Constant Voltage to be compatible with LIFELINE lighting fixtures and products. LIFELINE tracks are 14 AWG equivalents, however because its loads are distributed along, ignore track lengths when calculating remote power feed allowable cable distances. Account for max voltage drop of 2.5 VDC. For help see EKLIPSE document K01.

Wiring For **CEILING/WALL installation**, wiring option "B12": 12" UL Listed, NEC/CEC compliant CMP **plenum-rated** white cable, 2x 20 AWG and asymmetrically aligned crimp Butt splices for permanent connection. Class 2 wiring: no junction box required. Maintenance: splice accessible by pulling LIFELINE off the CEILING/WALL.
In **MILLWORK applications**, all wiring options: UL certified AWM black cable style 2464, 2x 20 AWG. Maintenance: follow furniture/millwork designer instructions.

Max load In North America: 100 W or 4.1A @24 VDC, per class 2 limits, by UL and the National Electrical Code (NEC) / Canadian Electrical Code (CEC).

Installation Smallest installation in cabinet is 6.0" (152 mm) deep by 6.0" (152 mm) high by the overall product length. Smaller installations could be a fire hazard. Please contact your EKLIPSE representative if your installation is smaller than that.

Naming rule for wiring specification

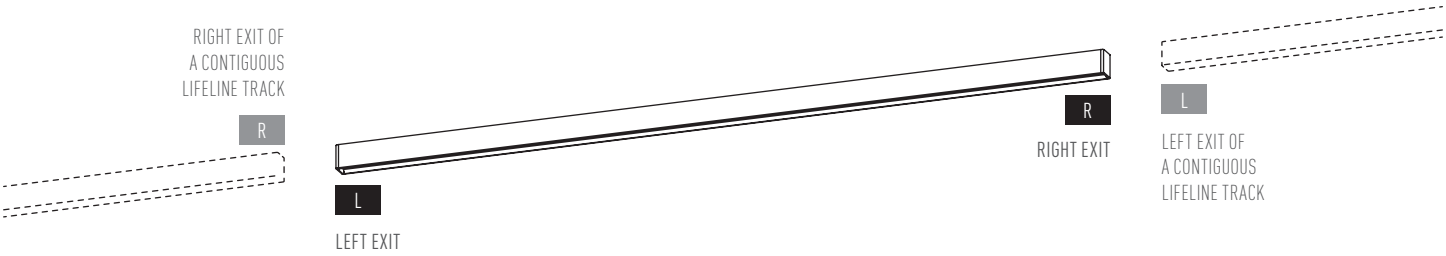

Mounting options

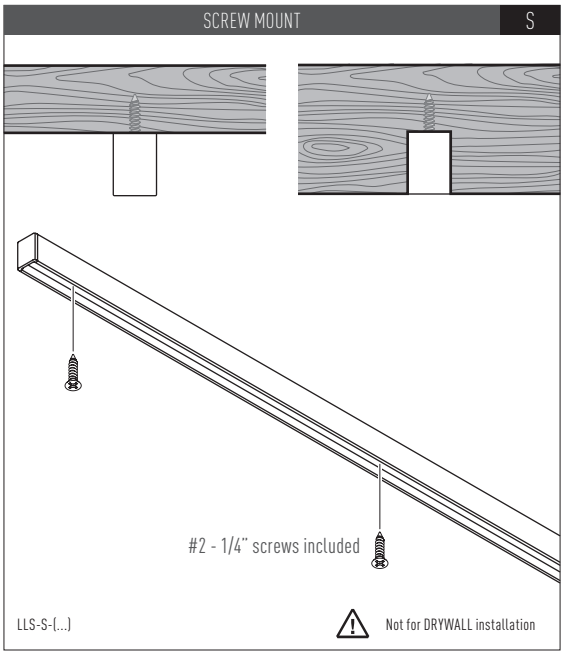

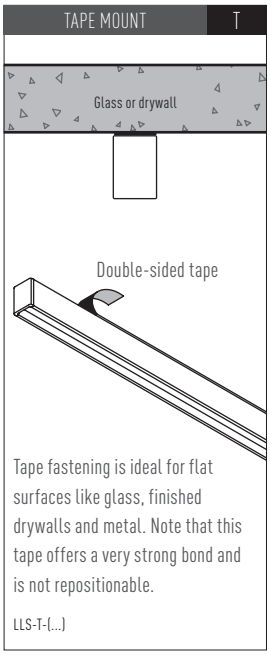

Length calculation

LIFELINE is built to match the "end-to-end" length specified in the order code. However, usable space to mount products *within* **LIFELINE** is always *less* than its overall length, due to the space taken off by each end cap. To calculate the usable space, subtract each connector in-channel length from the overall length of LIFELINE specified. Then subtract another 0.1" (3 mm) off for additional tolerance.

END CAP takes off 0.3" (8 mm). EC

POWER FEED CAP takes off 0.8" (20 mm). SX UN

CORNER CAP takes off 1.3" (33 mm). CC

INLINE CONNECTOR LINEAR takes off 0.7" (18 mm) on each side.

SINGLE WIRE EXIT - EXEMPLE

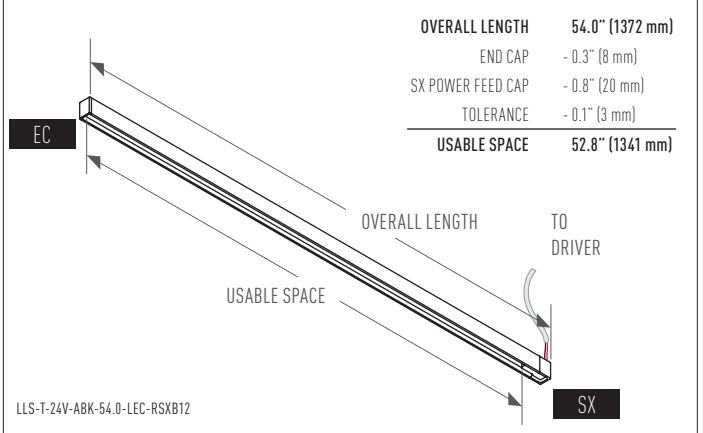

OVERALL LENGTH	**54.0" (1372 mm)**
END CAP	- 0.3" (8 mm)
SX POWER FEED CAP	- 0.8" (20 mm)
TOLERANCE	- 0.1" (3 mm)
USABLE SPACE	**52.8" (1341 mm)**

DOUBLE WIRE EXIT - EXEMPLE

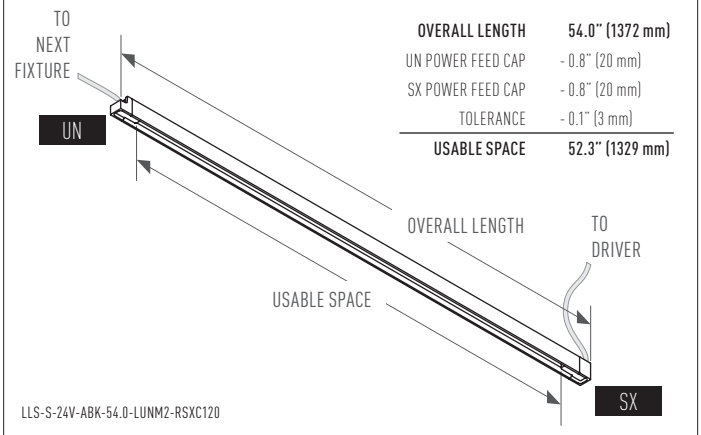

OVERALL LENGTH	**54.0" (1372 mm)**
UN POWER FEED CAP	- 0.8" (20 mm)
SX POWER FEED CAP	- 0.8" (20 mm)
TOLERANCE	- 0.1" (3 mm)
USABLE SPACE	**52.3" (1329 mm)**

Ceiling / Wall application wiring

CAP OPTIONS

SURFACE POWER FEED CAP — SX

Ideal choice for surface/ceiling installation. Power feed cable and through hole are completely hidden.

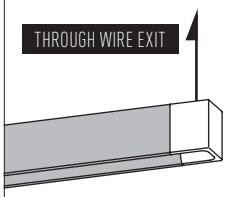

CORNER CAP INTERFACE — CC

Specify option **CC** at each end to interface fit a corner cap accessory when joining two LIFELINE segments at an angle. Refer to corner cap accessory.

⚠ Corner cap accessory to be **ORDERED SEPARATELY**.

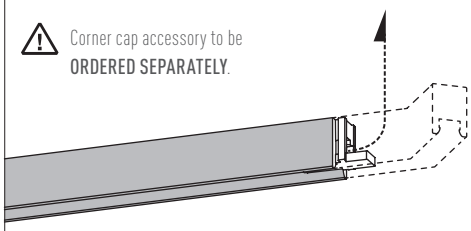

OPEN — OP

Specify **OP** (no cap) for connection to next inline track section. Requires the adjacent track end to be **OP** also.

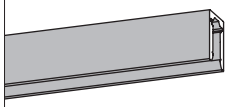

⚠ Requires INLINE CONNECTOR accessory to be ORDERED SEPARATELY (see Accessories section).

END CAP — EC

Specify **EC** cap for end of run (i.e. no cable feeds this segment end).

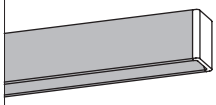

CONNECTOR AND WIRE LENGTH OPTIONS

CABLE WITH BUTT SPLICE — B — 12

SX power feed cap with option **B12** (CMP Cable with integrated inline Butt splice crimps) is required for hidden connection without junction box. See Electrical section for wiring details.

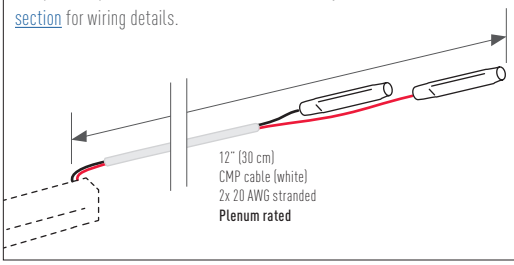

PLENUM CABLE — P — 120

SX power feed cap with option **P** (CMP plenum cable) is required for installation in a junction box (not included). See Electrical section for wiring details.

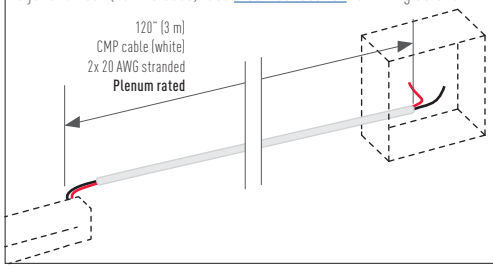

PLENUM CABLE — P —

Option **P** (CMP plenum cable) with custom length.

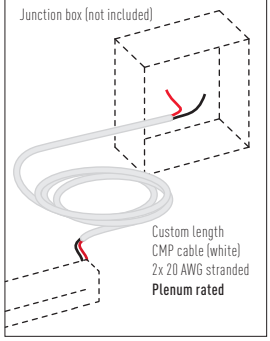

Millwork application wiring

CAP OPTIONS

SURFACE POWER FEED CAP — SX

Ideal choice for surface installation. Power feed cable and through hole are completely hidden.

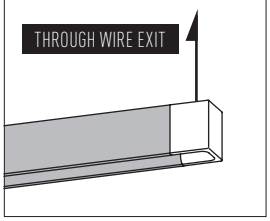

UNIVERSAL POWER FEED CAP — UN

Ideal choice for recessed integration. Wire can be routed out to any direction.

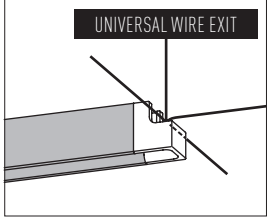

CORNER CAP INTERFACE — CC

Specify option **CC** at each end to interface fit a corner cap accessory when joining two LIFELINE segments at an angle. Refer to corner cap accessory.

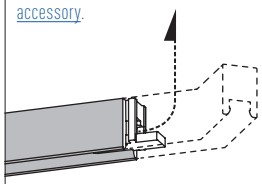

⚠ Corner cap accessory to be **ORDERED SEPARATELY**.

END CAP — EC

Specify **EC** cap for end of run (i.e. no cable feeds this segment end).

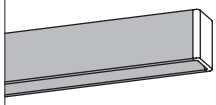

OPEN — OP

Specify **OP** (no cap) for connection to next inline track section.
Req. other segment end to specify **OP**.

⚠ Requires INLINE CONNECTOR accessory to be ORDERED SEPARATELY (see Accessories section).

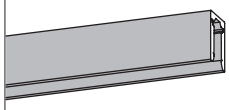

CONNECTOR AND WIRE LENGTH OPTIONS

STANDARD CABLE — C — 120

Standard cable with bare ends (included lever-nut connectors).

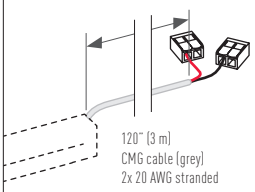

MALE QUICK CONNECTOR — M — 2

TE Mate-N-Lok Quick Connectors are used to feed power across segments.

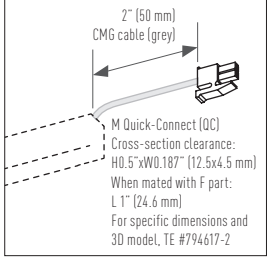

MALE QUICK CONNECTOR — M —

Always specify **CUSTOM LENGTH** cable in inches by whole number in code following **M**, up to 120" max.

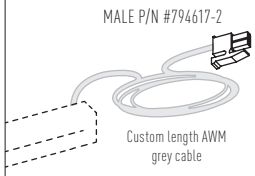

FEMALE QUICK CONN. — F — 2

TE Mate-N-Lok Quick Connectors are used to feed power across segments.

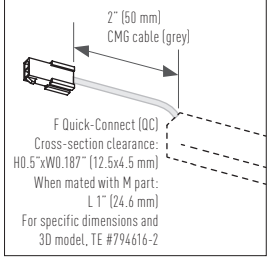

FEMALE QUICK CONN. — F —

Always specify **CUSTOM LENGTH** cable in inches by whole number in code following **F**, up to 120" max.

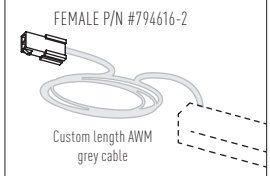

STANDARD CABLE — C —

Standard cable with bare ends (included lever-nut connectors).

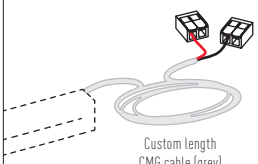

Field cut option

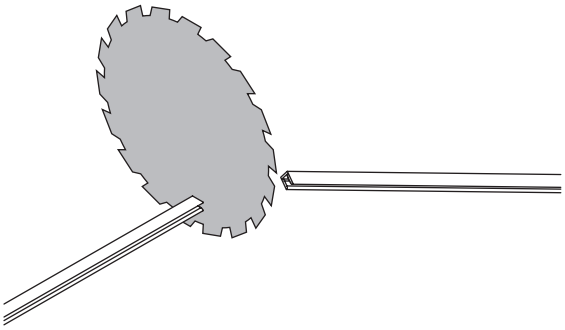

LIFELINE SURFACE can be field cut following provided procedure.

⚠

To avoid permanent damages, please follow the procedure outlined in **LIFELINE** field cut instructions before proceeding.

Accessories

Corner cap

LL-CC.##-FINISH

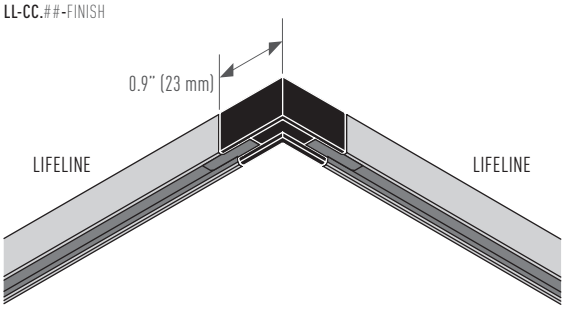

The corner cap is a required accessory (not included) when specifying **CC** interface option to both ends. This accessory is only the mechanical joint between two **LIFELINE** fixtures.

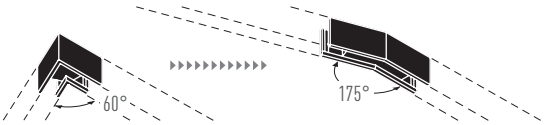

Angles available between 60° and 175° in 5° increments.

Corner cap jig

LL-CC.##-JIG

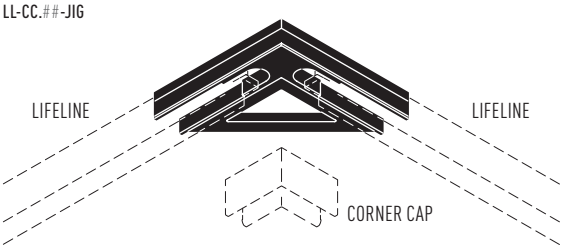

The jig is recommanded to properly place the LIFELINE fixtures and the corner cap during the installation. Available for all listed corner cap angles. Jig is reusable, recommended 1 jig per angle per order.

Inline connector

LL-ICL-ABK

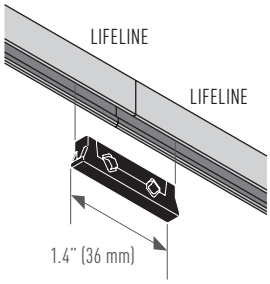

Inline Connectors for Linears, enable powering contiguous LIFELINE segments using a single power feed.

Extension cable

CAB.W3583-120-F-C

CAB.W3583-###-F-C

Available in 20AWG 120" (3m) (standard) or 20AWG custom length. Compatible with **M2** connector only.

LINK

LI-RCT-BLK

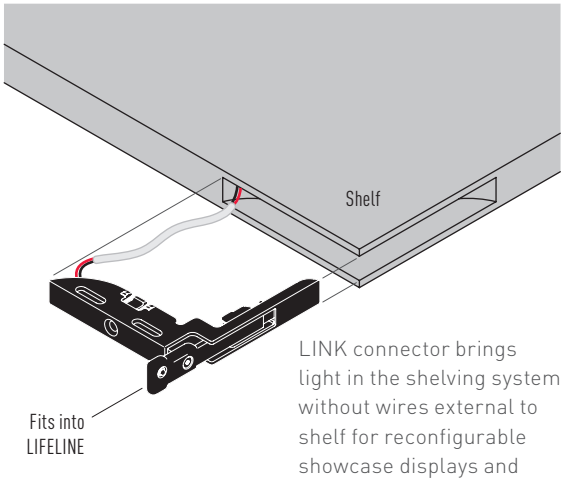

LINK connector brings light in the shelving system without wires external to shelf for reconfigurable showcase displays and cabinets. Download specsheet

WIRING OPTIONS FOR CORNER CAP

BOTH CIRCUIT ENDS

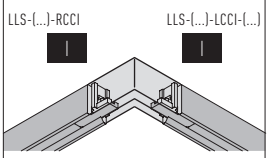

Specify option **I** for both insulated ends (i.e. power feeds are at the other ends).

ELECTRICAL CONNECTION

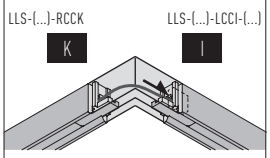

Specify option **K** at one segment end (**R**) to electrically connect across. Requires opposite end (**L**) of the other segment to specify option **I** to be the connecting input for **K** end.

BOTH POWER FEEDS

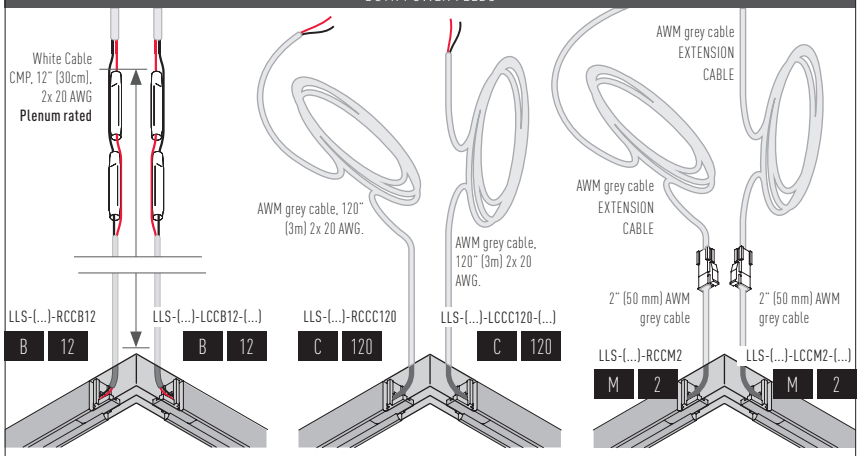

If circuits are separate, specify options **B**, **C**, **M** if feeding power through this end through the corner joint.

ONE POWER FEED

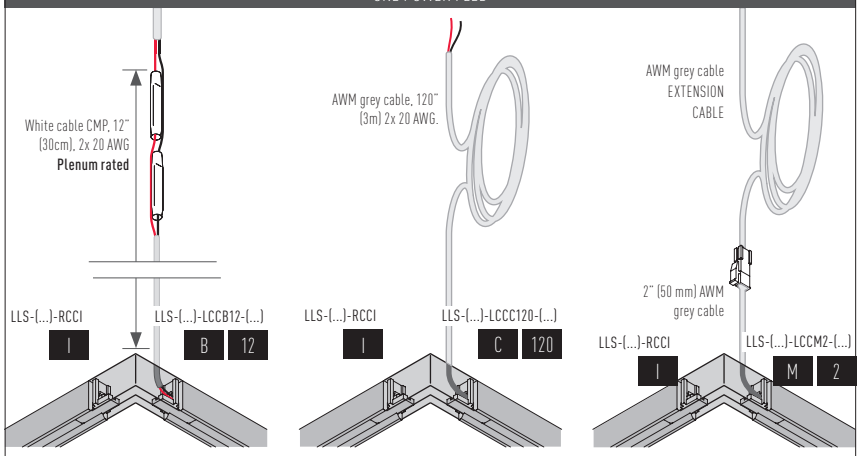

Specify **I** where one of the sides is the circuit end. Both left (**L**) and right (**R**) ends are available for wiring.

Specifying a LIFELINE system

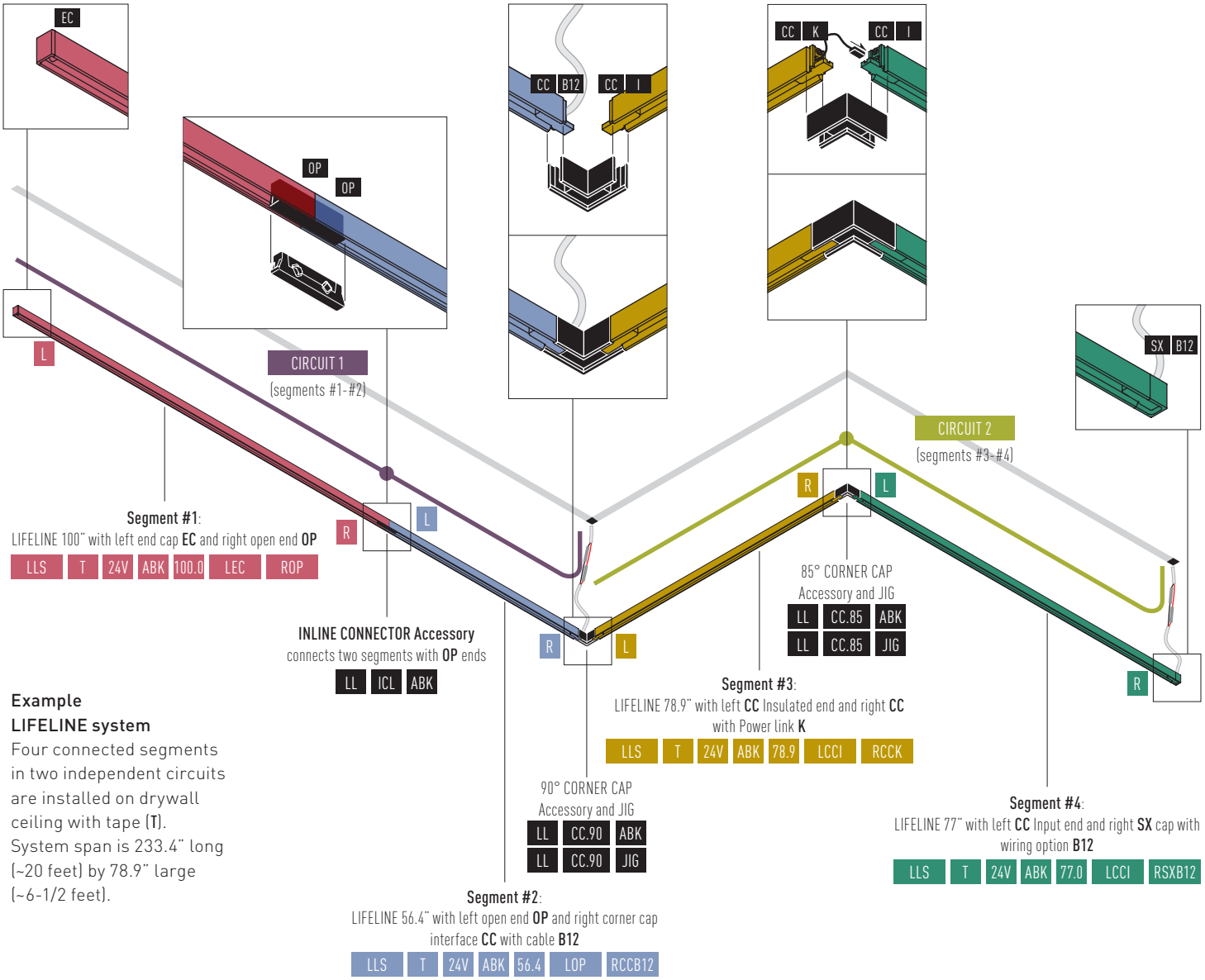

Example
LIFELINE system
Four connected segments in two independent circuits are installed on drywall ceiling with tape (T). System span is 233.4" long (~20 feet) by 78.9" large (~6-1/2 feet).

Example - Track segments - Order Codes

Segment #1	LLS-T-24V-ABK-100.0-LEC-ROP
Segment #2	LLS-T-24V-ABK-56.4-LOP-RCCB12
Segment #3	LLS-T-24V-ABK-78.9-LCCI-RCCK
Segment #4	LLS-T-24V-ABK-77.0-LCCI-RSXB12

Example - Accessories - Order Codes

Inline connector linear	LL-ICL-ABK
90° corner cap	LL-CC.90-ABK
90° JIG	LL-CC.90-JIG
85° corner cap	LL-CC.85-ABK
85° JIG	LL-CC.85-JIG

A custom LIFELINE system is specified by listing order codes of each item (track segment or accessory).

When the order code system is mastered, a plan is not needed to process your order.

No sub-assembly: each line item is packed separately.

Ceiling/wall installation ordering code

PRODUCT		CORE OPTIONS			EXTENDED OPTIONS
ID	MOUNTING OPTIONS	INPUT	FINISH	LENGTH	WIRING OPTIONS
LLS	T S	24V	ABK ACL MW	2.7 to 100.0	

LLS
LIFELINE SURFACE

T
Installation with double-sided tape

S
Installation with screws (not for Drywall)

ABK
Anodized black

ACL
Anodized clear

MW
Matte white

In inches

Specifiable by 0.1" increments.

⚠

Usable space is always LESS than LENGTH. See Length calculation section.

EXIT	END	CONN.	LENGTH
L	SX	B	12
		P	120
			###
	CC	B	12
		P	120
			###
		K	
		I	
	OP		
	EC		
R	SX	B	12
		P	120
			###
	CC	B	12
		P	120
			###
		K	
		I	
	OP		
	EC		

LIFELINE overall length and connection lengths are always specified in inches. Convert mm lengths to inches in order codes.

For remote power - Cable length limits, see our document K01

EXAMPLE	LLS	T	24V	ACL	INCHES 62.5	LSXB12 - REC
ORDERING CODE						

SX
Surface mount power feed cap

OP
Open end; no cap option. To feed electrical to adjacent track, requires linear inline connector accessory (to order separately)

CC
CC Interface end cap; Required to mate with corner cap accessory (to order separately)

EC
End cap; for track ends without any connections

B 12
12" CMP Cable (2x 20 AWG) with inline butt splice crimps. Required for ceiling/wall install.

P
Plenum rated cable.

K
Only with CC cap
"Power link" feeds electrical to adjacent **CC** joined track. Must mate with **I** input link from adjacent corner joined track.

I
Only with CC cap
"Insulated/Input link" is a dual use option. Its insulated terminated as in mechanical joining only of track segments. Its also an input link that can accept Power link connector from adjacent track (**CCK**)

Millwork installation ordering code

PRODUCT

ID

LLS

LLS
LIFELINE SURFACE

MOUNTING OPTIONS

T
S

T
Installation with double-sided tape

S
Installation with screws (for wood surfaces)

CORE OPTIONS

INPUT

24V

FINISH

ABK
ACL
MW

ABK
Anodized black

ACL
Anodized clear

MW
Matte white

LENGTH

2.7 to 100.0

In inches

Specifiable by 0.1" increments.

⚠

Usable space is always LESS than LENGTH. See Length calculation section.

EXTENDED OPTIONS

WIRING OPTIONS

EXIT	END	CONN.	LENGTH
L	SX	C	120
			###
		M	2
			###
		F	2
			###
	UN	C	120
			###
		M	2
			###
		F	2
			###
	CC	C	120
			###
		M	2
			###
		K	
		I	
	OP		
	EC		
R	SX	C	120
			###
		M	2
			###
		F	2
			###
	UN	C	120
			###
		M	2
			###
		F	2
			###
	CC	C	120
			###
		M	2
			###
		K	
		I	
	OP		
	EC		

LIFELINE overall length and connection lengths are always specified in inches. Convert mm lengths to inches in order codes.

Custom cable lengths available for Millwork standard (**C**) and quick connectors terminated (**M**, **F**). For further details, refer to End options section.

For remote power - Cable length limits, see our document K01

SX
Surface mount power feed cap

UN
Universal power feed cap; for recessed installation or total freedom with cable routing path

CC
CC Interface end cap; Required to mate with corner cap accessory (to order separately)

OP
Open end; no cap option. To feed electrical to adjacent track, requires linear inline connector accessory (to order separately)

EC
End cap; for track ends without any connections

C 120
120" cable standard UL with bare wire ends and lever-nut connectors

M 2
Male Quick Connect with 2" standard UL appliance cable

F 2
Female Quick Connect with 2" standard UL appliance cable

K
Only with CC cap
"Power link" feeds electrical to adjacent CC joined track. Must mate with **I** input link from adjacent corner joined track.

I
Only with CC cap
"Insulated/Input link" is a dual use option. Its insulated terminated as in mechanical joining only of track segments. Its also an input link that can accept Power link connector from adjacent track (**CCK**)

EXAMPLE	LLS	S	24V	ABK	INCHES 100.0	LUNC120 - REC
ORDERING CODE						

Accessories ordering code

Extention cable

CAB.W3583	120 ###	F	C

120
120" (3m) standard length

###
Custom length in inches

EXAMPLE	CAB.W3583	INCHES 146	F	C
ORDERING CODE				

Inline connector

LL	ICL	ABK

ORDERING CODE			

Link

LI	RCT	BLK

ORDERING CODE			

Corner cap

LL	CC.60 CC.65 CC.70 CC.75 CC.80 CC.85 CC.90 CC.95 CC.100 CC.105 CC.110 CC.115 CC.120 CC.125 CC.130 CC.135 CC.140 CC.145 CC.150 CC.155 CC.160 CC.165 CC.170 CC.175	ABK ACL MW

ABK
Anodized black

ACL
Anodized clear

MW
Matte white

CC.###
Corner cap angle in degrees

EXAMPLE	LL	CC.120	ABK
ORDERING CODE				

JIG

LL	CC.60 CC.65 CC.70 CC.75 CC.80 CC.85 CC.90 CC.95 CC.100 CC.105 CC.110 CC.115 CC.120 CC.125 CC.130 CC.135 CC.140 CC.145 CC.150 CC.155 CC.160 CC.165 CC.170 CC.175	JIG

CC.###
JIG angle in degrees

EXAMPLE	LL	CC.120	JIG
ORDERING CODE				

ARCHITECTURAL LIGHTING EKLIPSE

2090 rue Moreau
Suite 100
Montréal, QC - H1W 2M3
Canada

T +1 514 590 0099
INT 1 877 590 0099
F +1 514 590 0098
sales@eklipselighting.com
www.eklipselighting.com

RoHS COMPLIANT

CAN ICES-005 (B) CAN NMB-005 (B)

MADE IN CANADA
FABRIQUÉ AU

Warranty

Our products and related parts are guaranteed for **three (3)** years.
See our terms and conditions on
www.eklipselighting.com